SPRING HILL PLANNING COMMISSION
REGULAR MEETING AGENDA

Thursday January 8, 2009
7:00 p.m.
Spring Hill Civic Center
401 N. Madison

NOTE: Please meet in room 10, on the south west side of the hall from the reception room.

CALL TO ORDER

ROLL CALL

Tobi Bitner	Michael Newton
Janet Harms	Tim Pittman
Brian Haupt	Steven Sebasto
Valerie Houpt	Cindy Squire
Bill Kiesling	

APPROVAL OF AGENDA

FORMAL COMMISSION ACTION

1. Approval of Minutes

   December 4, 2008

- **Non-Public Hearing Items**

2. Site Plan
   Case No.: SP-05-08
   Request: O_2 Plant
   Address: 20400 Webster St.
   Applicant : AGC Flatglass

3. Rezoning
   Case No.: Z-02-08
   Request: Change from R-1 Single Family to RP-1, Planned Single Family
   Address: Country Hill Farms
   Applicant : Columbia Partners

4. Preliminary Plat
   Case No.: PP-01-08
   Request: Planned Subdivision
   Address: Country Hill Farms
   Applicant : Columbia Partners

- **Public Hearing Item**

5. Change of Zoning Ordinance for parking of recreational vehicles

DISCUSSION

OTHER BUSINESS

ADJOURN

PUBLIC HEARING PROCEDURE

1. Chairperson opens the public hearing.

2. Commission members describe what, if any, ex-party contacts they might have had regarding this case; indicating the nature of the communication and *whom* it was with.

3. Commission members describe what, if any, conflicts of interest they may have and dismiss themselves from the hearing.

4. Staff presents a report and comments regarding the case.

5. Applicant or agent of the applicant makes brief presentation of the case or request.

6. Commission members ask for any needed clarification of the applicant or agent.

7. Public comments are solicited from the audience. Each member of the audience must fill out a Citizen Participation/Comment Form.

8. Commission members ask for any further clarifications from applicant or staff.

9. Public Hearing is closed.

10. Members deliberate the request.

11. 14-day Protest Period begins after the Planning Commission Public Hearing is closed. *****

***** **Protest Petitions:** Any protest petition must be filed in the Office of the Spring Hill City Clerk within 14 days from the conclusion of the public hearing held by the Planning Commission. Sample copies of protest petitions may be obtained from the City Clerk Office at 401 N. Madison, Spring Hill, KS 66083 (913-592-3664).

Planning & Development

City of Spring Hill, KS

Memo

To: Spring Hill Planning Commission

From: Jim Hendershot, Planning & Development Coordinator

CC: file

Date: December 15, 2008

Re: Overview of January 8, 2009 agenda

The next meeting of the Spring Hill Planning Commission is scheduled for 7:00PM on Thursday, January8, 2009. The following is an overview of the agenda items:

1. **Approval of minutes of December 4, 2008 meeting**

2. **Site Plan SP-05-08, AGC Flatglass VPSA Oxygen Plant, 20400 Webster Street:**

   Included with this packet you will find a staff report on this item, site plan sheets and email communications providing additional details. The proposed plant is a pre-manufactured unit with final assembly on site. The facility is 50' x150' in total size and will be located on the north side of the existing plant. Once the facility is operational the existing oxygen storage tanks will be removed and truck deliveries of oxygen will be nearly eliminated. This provides increased safety both at the plant and on the delivery routes to AGC. While the project is small in size, staff had concerns with noise pollution from the proposed unit. These concerns have been addressed in the information provided with this packet. Basically, noise protection is provided in the form of an enclosed building and silencers on the intake and discharge equipment.

3 & 4. Rezoning, Country Hill Farms: This item was tabled at the Dec. 4, 2008 meeting for further consideration of two issues; 1) large lot transition screening and buffering, and 2) traffic access and congestion in the area. I have visited with the applicants on these issues and they are prepared to respond to the large lot transition issue. With respect to the traffic issues it is my opinion the rezoning and preliminary plan should be approved with knowledge that staff is committed to finding a resolution of the traffic issue by revisiting the Columbia Road extension project or investigating any opportunity to extend an east/west road

from Columbia Road to Lone Elm (access road along US169). It is staffs opinion that extending Columbia Road remains the optimal solution. Acquiring right-of-way from the Spring Creek Subdivision for an east/west road may prove difficult at best. If this east/west road was completed the connection at 223rd would then become a hazard. In addition, there are long range plans for the closing of Old KC Road from 223rd to Columbia Road. The extension of Columbia Road south from the Country Hill Farms area would create a 4-way intersection and remains on KDOT's map for financial assistance. Staff is unsure if KDOT would be a financial partner in any other project other than Columbia Road. The traffic impact study from Country Hill Farms is based on full build out of the Country Hill Farms and Spring Creek development. At certain points of development, traffic counts are generated that determine when improvements are necessary. In other words, improvement to the transportation system will not come until the traffic counts are generated, and traffic counts will not be generated without development. For this reason, staff recommends approval of the proposal with planning by staff for the extension of Columbia Road.

5. Public Hearing; Section 17.342, Parking and/or storing of recreational vehicles in residential districts: At a previous meeting the PC established January 8, 2009 as a public hearing date to discuss this issue. Notice of the hearing was published in the official newspaper as required. Included in this packet is a draft amendment to Section 17.342. The draft identifies the proposed changes as previously discussed by the PC utilizing a strike through to indicate existing language to be deleted, and red lettering identifying new language to the code.

The primary purpose of the amendment is to clarify the type of surface for parking and/or storing a recreational vehicle in a residential district. The amendment requires a concrete or asphalt parking surface for the length of the vehicle if stored in the front yard. The parking surface for rear yard storage can be concrete, asphalt or gravel. Storing an RV in the side yard is permitted on a concrete or asphalt surface. If the RV is stored in the side yard and screened from view with a minimum 6 foot privacy fence, the parking surface can be gravel. In all instances the parking surface must be maintained rut free and run the entire length of the vehicle.

Existing gravel RV parking areas in front or side yards would be allowed to remain in place but must be properly maintained. If the gravel is removed it may not be replaced unless with concrete or asphalt as provided in the amendment.

Ribbon type parking surfaces would be allowed with this amendment provided they are constructed of concrete or asphalt, run the entire length of the vehicle and are maintained in a rut free manner.

THE FOLLOWING MINUTES ARE SUBJECT TO MODIFICATION
AND ARE NOT OFFICIAL MINUTES
UNTIL APPROVED BY THE PLANNING COMMISSION

SPRING HILL PLANNING COMMISSION
REGULAR MEETING
December 4, 2008

The Spring Hill Planning Commission met in an executive session on Thursday, December 4, 2008, at 6:45 P.M., in room 15, at the Civic Center located at 401 N. Madison.

At 6:50 PM

Motion by Brian Haupt to recess into Executive Session pursuant to the Attorney Client Privilege Exception for the following subject:

COUNTRY HILL FARMS/COLUMBIA PARTNERS DEVELOPMENT

It is anticipated to take approximately 15 minutes.

Seconded by Cindy Squire. Motion passed 6 yes; 0 no; 0 abstention

Parties present:

Janet Harms
Brian Haupt
Valerie Houpt
Bill Kiesling
Steven Sebasto
Cindy Squire

Jim Hendershot, Community Development Coordinator
Frank H. Jenkins, Jr., City Attorney
Mike Seck, City Defense Counsel

At 7:05 PM

Motion by Brian Haupt to extend the Executive Session pursuant to the Attorney Client Privilege Exception for the following subject:

COUNTRY HILL FARMS/COLUMBIA PARTNERS DEVELOPMENT

It is anticipated to take approximately 15 minutes.

Seconded by Cindy Squire. Motion passed 6 yes; 0 no; 0 abstention

Same parties as above were present.

Let the record reflect that the Planning Commission reconvened into the regular meeting at 7:17 PM. No votes were taken and no decisions were made.

Motion by Brian Haupt to adjourn the Executive Session
Seconded by Cindy Squire. Motion passed 6 yes; 0 no; 0 abstention

The Spring Hill Planning Commission met in a regular session on Thursday, December 4, 2008, at 7:00 P.M., in room 15, at the Civic Center located at 401 N. Madison.

CALL TO ORDER

Vice-Chair Sebasto called the meeting to order at 7:17 P.M.

ROLL CALL

Roll call by Mary Nolen.

THE FOLLOWING MINUTES ARE SUBJECT TO MODIFICATION
AND ARE NOT OFFICIAL MINUTES
UNTIL APPROVED BY THE PLANNING COMMISSION

Members Present:	Janet Harms	Members Absent:	Tobi Bitner
per role call	Brian Haupt		Michael Newton
	Valerie Houpt		Tim Pittman
	Bill Kiesling		
	Steven Sebasto		
	Cindy Squire		

Staff Present: Jim Hendershot, Community Development Coordinator
Frank H. Jenkins, Jr., City Attorney
Rory Hale, Public Works Director
John Brann, City Engineer
Steve Bachenberg, City traffic consultant
Tony Stanton, City storm water consultant
Mary Nolen, Planning Secretary

Others present: Ron Stiles, Joe Milkowski, Diana Milkowski, Shelly Frazier, Susan Gerrity, Tim Gerrity, Susan Ratliff, Martin Rosey, Gergory M. Todd, Tammie Todd, Charles Boston, Pat Boppart, Michael Shane Mitchell, Roger Norris, Victor Burks, Josh Thiede, Mark Epstein, Dan Waldberg, Jeff House

APPROVAL OF THE AGENDA

Motion by Cindy Squire to approve the agenda
Seconded by Bill Kiesling. Motion passed 6 yes; 0 no; 0 abstention

FORMAL COMMISSION ACTION

1. Approval of Minutes:

November 6, 2008

Motion by Brian Haupt to approve the November 6, 2008.
Seconded by Bill Kiesling. Motion passed 6 yes; 0 no; 0 abstention

Public Hearing Items

1. Rezoning
   Case No.: Z-02-08
   Request: Change from R-1 Single Family to RP-1, Planned Single Family
   Address: Country Hill Farms
   Applicant: Columbia Partners

2. Preliminary Plat
   Case No.: PP-01-08
   Request: Planned Subdivision
   Address: Country Hill Farms
   Applicant: Columbia Partners

Chair Sebasto introduced the public hearing items, and noted the quantity of people in attendance. He asked that comments be limited so everyone can speak.

He asked if any members have any exparte communications or conflict of interest with this item. Ms. Harms indicated she lives within the protest area of the rezoning, and would like to recluse herself from the topic, and removed herself

from the meeting. Ms. Squire had a very brief conversation with some of the neighbors, saying they had met with the developers, and she stopped the conversation as soon as she was aware of the topic.

The City Attorney noted that Planning Commissioners received letters from property owners, some of which were sent to the Commissioners home, and some that were received at City Hall for the Commissioners. All letters were distributed to all Commissioners and the applicants legal staff. Ms. Squire noted that she did not receive a letter to her home addressed to her, nor was one included for her of the group sent to City Hall. There are three letters in total, and all letters were copied and given to all Commissioners and the applicants legal staff.

START OF STAFF REPORT

Case #:	PP-01-08 & Z-02-08	**Meeting Date:**	December 4, 2008
Description:	Proposed Preliminary Plan – Country Hill Farms Proposed Rezoning from R-1 to RP-1		
Location:	South of 215th St., West of Columbia Road, North of 220th St.		
Applicant:	Columbia Partners, LLC		
Engineer:	Allenbrand-Drews		
Site Area:	59.44 acres		
Minimum Lot Area:	5,500 sq. ft. (RP-1)	**Number of Lots:**	224
Current Zoning:	"R-1"	**Proposed Use:**	Residential Subdivision

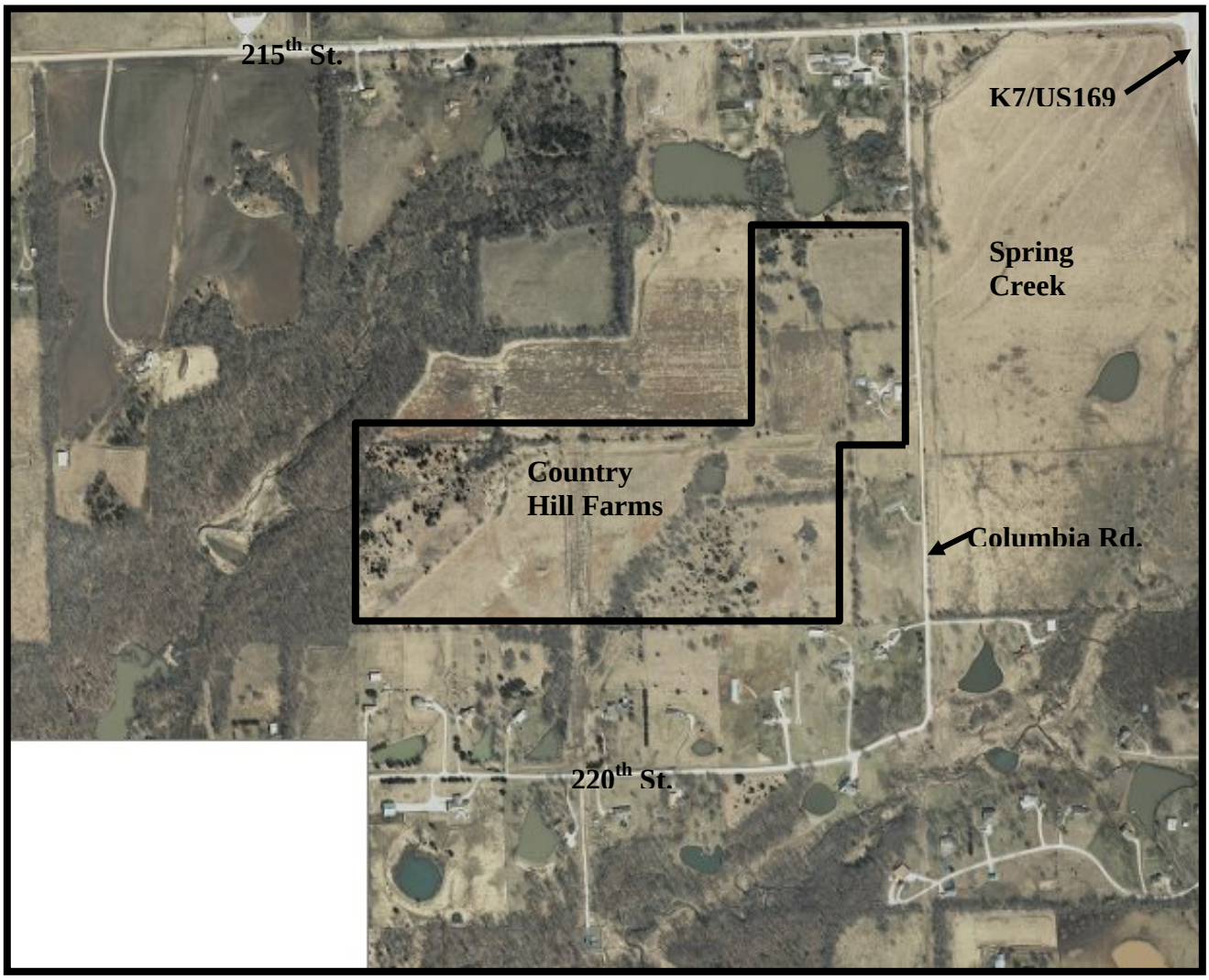
215th St.
K7/US169
Spring
Creek
Country
Hill Farms
Columbia Rd.
220th St.

CURRENT ZONING

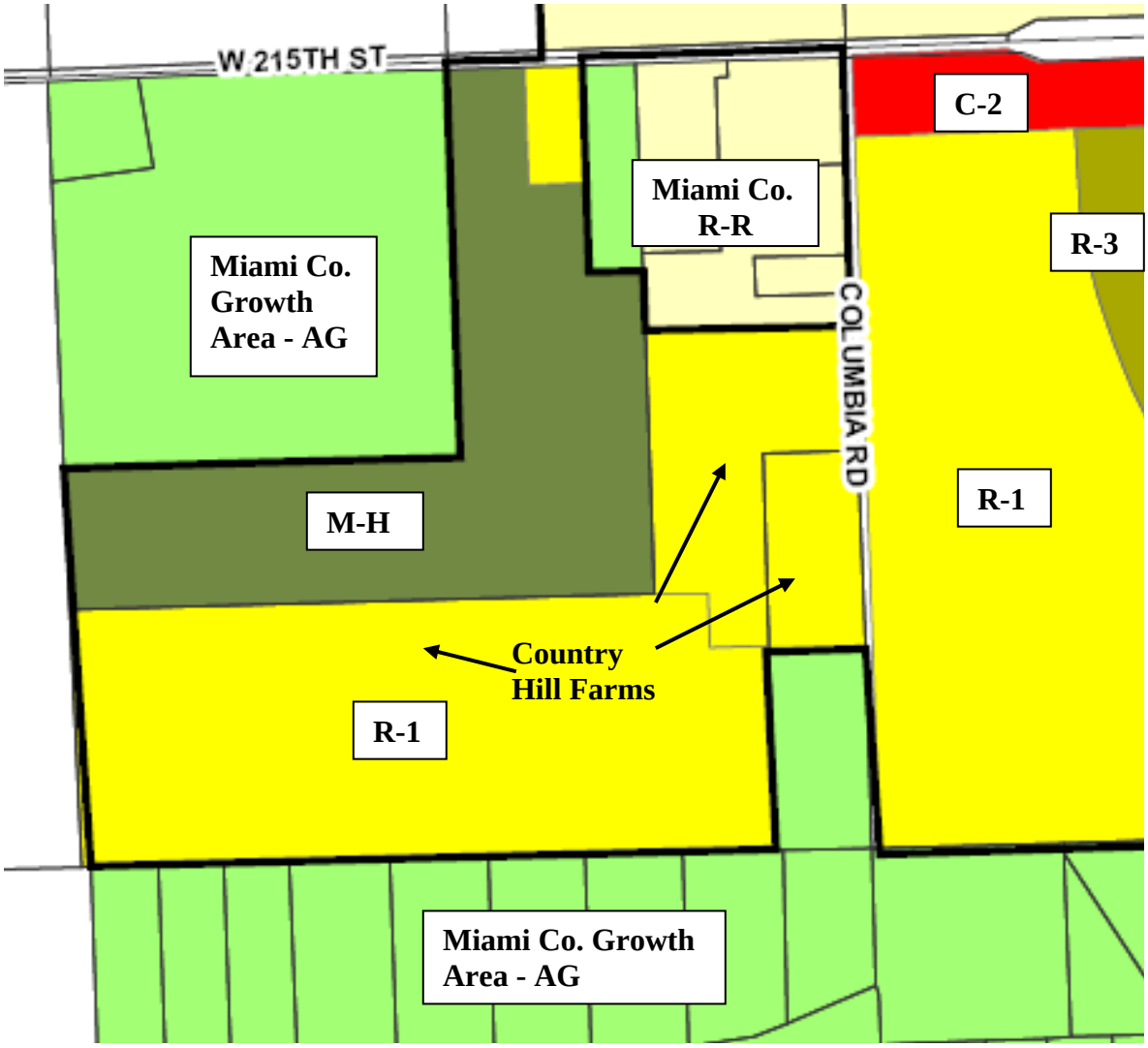

BACKGROUND:
An application has been received by the Planning Department for the rezoning of the above depicted tract of land known as Country Hill Farms (legal description included with packet) from R-1 Single-Family Residential to RP-1 Planned Single-Family District. In addition an application has been received for consideration of the Preliminary Development Plan for Country Hill Farms (copy of preliminary development plan included with packet).

The history of Country Hill Farms includes previous submission and review of the preliminary plat by the Planning Commission. On May 3, 2007 the Planning Commission voted to deny the preliminary plat for Country Hill Farms subject to "Findings of Fact" that were then approved in June 2007. This denial led to court action being filed by Columbia Partners against the City of Spring Hill for wrongful denial of the preliminary plat. The primary argument by Columbia Partners cited in the lawsuit revolved around the City attempting to enforce regulations that were not

officially adopted at the time of the preliminary plat review. These regulations included large lot buffer areas and storm water management practices (BMP's) as required by APWA5600.

Over the past several months staff has been meeting with representatives from Columbia Partners and Victor Burks of Allenbrand-Drews Engineering in an attempt to resolve issues of the original preliminary plat and thus allow the project to continue through the planning phases. Motions have been filed by the attorneys to postpone court action while the parties meet. In addition, staff has been meeting with legal staff and providing updates on the development meetings. The meetings between staff and the applicants have been very positive and productive, and have led to the applications covered in this staff report.

It is important to understand that the rezoning and preliminary development plans reviewed by this staff report are totally new concepts, yet contain similarities to the previously denied preliminary plat. Discussions were held early on with Columbia Partners as to the advantages and/or disadvantages to amending the original preliminary plat or submitting a new concept for a Planned Residential District. Staff carefully outlined the procedures involved with submitting a new concept and the requirements of a Planned Development and specifically clarified that a rezoning application would require public hearings, neighborhood meetings and all other requirements of the zoning and subdivision codes.

Both parties agreed that rezoning and planned development applications would stand on their own merits and should not be compared to previous plat submissions. However, it must also be understood that resolution of the pending litigation is an underlying factor in the process as both the City and Columbia Partners wish to avoid further legal action. It is with this compromise attitude being well established that Columbia Partners submitted a preliminary plan that implemented many items to resolve the "Findings of Fact" of the previous submittal. City staff has strived to be as supportive of the plan as possible while working within the context of the applicable codes.

It is staff's opinion that the Planning Commission should, as much as possible, consider this application as a new concept and not rely on opinions formed at previous meetings. In addition, many of the current Planning Commission members were not on the PC in 2007 and do not have firsthand knowledge of previous proceedings.

STAFF COMMENT:

The preliminary development plan for Country Hill Farms contains 59.44 acres with 224 residential lots of at least 5,500 sq. ft. as required in an RP-1 district. The plan also contains five areas that provide open space as well as storm water management areas (BMP's) as suggested by Tony Stanton, city consultant with Olsson and Associates. The development has two points of ingress/egress on Columbia Road with five other roads planned for connection to future developments.

The plans were distributed to consultants and utility providers including Hillsdale Water Quality Project, Kansas Department of Transportation, Johnson County Fire District #2, City Engineer, City Public Works Director, Miami County Engineering, BWR (planning consultant), BHC Rhodes (traffic engineering consultant) and others. Comments from these consultants have been implemented into the staff report and/or the plans as applicable with the exception of Hillsdale Water Quality Project and KDOT. Comments from these entities have not been received but will be provided at the Planning Commission meeting.

Spring Hill currently has sewer available on the property and water will be provided by Rural Water District #7.

The applicant's traffic engineer, TranSystems, prepared the Traffic Impact Study for the original plat submission and has updated this report as applicable for the increased density resulting from the rezoning request. Copies of the original report, the update and comments from BHC Rhodes are included with this staff report and are also discussed elsewhere in the report.

REZONING REVIEW AND COMMENTS:

The following review is based on criteria found in Section 17.364.D of the Spring Hill Zoning Ordinance.

CONSISTENT WITH PURPOSES OF THIS REGULATION AND INTENT OF THE PROPOSED DISTRICT

The request is consistent with the purposes of the zoning regulations and the intent of the proposed district. This is based on the current zoning district of R-1 that was established on 10/12/06 and becomes the underlying zoning district for an RP-1 district.

CHARACTER OF THE NEIGHBORHOOD

To the west and north of the proposed rezoning area the land is primarily vacant and used for agriculture or is heavily wooded. North of the proposed rezoning area along Columbia Road is a single-family dwelling separated from the subdivision by a vacant tract. At the southwest corner of Columbia Road and 215th St. is a single-family tract of 3.6 acres. To the east of the subdivision on the east side of Columbia Road is the area known as Spring Creek Subdivision which is currently undeveloped but zoned R-1. To the southeast and south of the subdivision are several single-family residences on tracts ranging in size for 3.3 to 5 acres.

ZONING AND USES OF NEARBY PARCELS

See zoning map on page 3 of staff report.

REQUESTED BECAUSE OF CHANGING CONDITIONS

The rezoning request is based on a perceived change in marketability of the property containing lots of "Age Oriented" (over 50) occupancy. This concept is based on the owner's marketing study on the area in and around Spring Hill.

SUITABILITY OF PARCEL FOR USES PERMITTED BY THE PROPOSED DISTRICT

The site is currently zoned R-1 (single-family residential). The site is suitable for the proposed district as R-1 is the underlying district for RP-1, however the density will be increased with smaller residential lots.

DETRIMENTAL EFFECTS ON NEARBY PARCELS

The neighboring property could better speak to this issue, however the current zoning allows the development of the area as single-family residential. The proposed zoning will remain single-family residential but with increased density. Included with this packet are notes provided by the applicant reflecting the neighborhood meeting held on November 10, 2008.

PROPOSED AMENDMENT CORRECTS AN ERROR

No error is being corrected.

LENGTH OF TIME OF PROPERTY HAS BEEN VACANT

The property remains undeveloped.

ADEQUACY OF CURRENT FACILITIES

Public sewer is available on the property and the owner has been in contact with the water utility provider for extension of services to the site.

CONFORMITY WITH THE COMPREHENSIVE PLAN;

The Future Land Use map identifies the site as residential, therefore, the site is in compliance with the Comprehensive Plan from the standpoint of land use.

HARDSHIP IF APPLICATION IS DENIED

The owner could better speak to the issue of hardship if denied.

PRELIMINARY DEVELOPMENT PLAN REVIEW AND COMMENTS:

The following review is based on criteria found in Section 17.332 of the Spring Hill Subdivision Regulations. Excerpts from the code are as follows:

17.332.A - PURPOSE.

THE ZONING OF LAND TO ONE OF THE PLANNED DISTRICTS SHALL BE FOR THE PURPOSE OF ENCOURAGING AND REQUIRING ORDERLY DEVELOPMENT ON A QUALITY LEVEL GENERALLY EQUAL TO THAT OF THE EQUIVALENT STANDARD ZONING DISTRICTS, BUT PERMITTING DEVIATIONS FROM THE NORMAL AND ESTABLISHED DEVELOPMENT TECHNIQUES. THE USE OF PLANNED ZONING PROCEDURES IS INTENDED TO ENCOURAGE LARGE-SCALE DEVELOPMENT TRACTS, EFFICIENT DEVELOPMENT OF SMALL TRACT, INNOVATIVE AND IMAGINATIVE SITE PLANNING, CONSERVATION OF NATURAL RESOURCES AND MINIMIZING THE INEFFICIENT USE OF LAND.

17.332.E - STANDARDS OF DEVELOPMENT.

1. THE PROPERTY DEVELOPMENT STANDARDS SHALL BE AS SET OUT IN THE EQUIVALENT DISTRICT. HOWEVER, MODIFICATIONS TO THE UNDERLYING PROPERTY DEVELOPMENT STANDARDS MAY BE GRANTED IN ACCORDANCE WITH THE PROPERTY DEVELOPMENT STANDARDS FOR PLANNED ZONING DISTRICTS PROVIDED SECTION 17.338.A.2. REDUCTION OF LOT AREA, SETBACKS, OR OTHER OPEN SPACE SHALL BE COMPENSATED BY ADDITIONAL OPEN SPACE IN OTHER APPROPRIATE PORTIONS OF THE PROJECT. IN ALL CASES, SUCH MODIFICATIONS SHALL BE IN KEEPING WITH GOOD LAND PLANNING PRINCIPLES, AND MUST BE SPECIFICALLY SET OUT IN THE MINUTES OF THE PLANNING COMMISSION, AS WELL AS ON PLANS AND OTHER EXHIBITS IN THE RECORD.

6. FOR RESIDENTIAL DEVELOPMENTS GRANTED REDUCTIONS TO THE MINIMUM LOT AREA PER DWELLING UNIT, A MINIMUM FIFTEEN (15) PERCENT OF THE NET LAND AREA SHALL BE DECLARED AS COMMON OPEN SPACE. A MINIMUM OF FIFTY (50) PERCENT OF THE REQUIRED COMMON OPEN SPACE AREA IN RESIDENTIAL DEVELOPMENTS SHALL BE DEVELOPED AS ACTIVE OPEN SPACE FOR USE BY ALL PERSONS WHO RESIDE IN THE SUBDIVISION. SUCH OPEN SPACE SHALL BE LOCATED IN HIGHLY ACCESSIBLE LOCATIONS SURROUNDED PREDOMINATELY BY PUBLIC STREETS RATHER THAN LOCATED BEHIND DEVELOPMENT OR ON REMNANT TRACTS OF LAND. VARIATIONS TO THESE MINIMUM OPEN SPACE STANDARDS MAY BE GRANTED WITH APPROVAL OF A PRELIMINARY DEVELOPMENT PLAN PROVIDED THE PLANNING COMMISSION AND CITY COUNCIL DETERMINE THE DEVELOPMENT ACHIEVES THE OBJECTIVES OF PLANNED ZONING STATED IN SECTION 17.332.B, AND THE RECOMMENDATIONS OF THE *COMPREHENSIVE PLAN* INCLUDING THE *PLANNING PRINCIPLES AND DESIGN GUIDELINES*.

   The Country Hill Farms preliminary plan provides for 8.7% or 3.73 acres net area as open space. This acreage is less than the 15% open space requirement, however code compensates for this with the option of park fees in lieu of meeting the open space requirement. Park fees of $300.00 per lot payable with each building permit are applicable in this subdivision.

8. RESIDENTIAL AND COMMERCIAL ZONED DEVELOPMENTS ARE EXPECTED TO USE HIGHER-QUALITY DURABLE BUILDING MATERIALS AND ARCHITECTURAL-DESIGN FEATURES THAT PROVIDE AN INCREASE IN VISUAL INTEREST OVER CONVENTIONAL ZONED DEVELOPMENTS. SUCH DEVELOPMENTS ARE EXPECTED TO COMPLY WITH THE *PLANNING PRINCIPLES AND DESIGN GUIDELINES* RECOMMENDATIONS IN THE *COMPREHENSIVE PLAN*, INCLUDING RECOMMENDED BUILDING MATERIALS AND BUILDING DESIGN. SINGLE-FAMILY RESIDENTIAL USES ARE EXPECTED TO INCORPORATE BUILDING MATERIALS CONSISTENT WITH THOSE RECOMMENDED FOR MULTIFAMILY RESIDENTIAL DEVELOPMENTS AS WELL AS STUCCO AND FIBER-CEMENT BOARD, PARTICULARLY ON SIDES OF THE STRUCTURES VISIBLE TO THE PUBLIC, EXCEPT THAT THE SIDES AND REAR OF SUCH SINGLE-FAMILY STRUCTURES MAY BE PERMITTED OTHER EXTERIOR FINISHES.

9. RESIDENTIAL ZONED DEVELOPMENTS GRANTED LOT AREA, LOT WIDTH, OR BUILDING SETBACK REDUCTIONS SHALL COMPLY WITH THE RECOMMENDATIONS OF THE *COMPREHENSIVE PLAN* AND ASSOCIATED PLANNING PRINCIPLES AND DESIGN GUIDELINES TO LIMIT THE WIDTH OF GARAGES ORIENTED TOWARD THE STREET IN RELATION TO THE OVERALL WIDTH OF THE RESIDENTIAL STRUCTURE, AND TO LIMIT GARAGE PROJECTIONS IN FRONT OF HABITABLE LIVING SPACE. THE NUMBER OF GARAGES ORIENTED TOWARD A STREET IN A MULTIFAMILY STRUCTURE SHALL BE LIMITED TO MINIMIZE THE NUMBER OF VISIBLE GARAGES AND THE AMOUNT OF PAVEMENT IN THE FRONT YARD SETBACK. ADDITIONAL ARCHITECTURAL AND SITE DESIGN REQUIREMENTS MAY BE ESTABLISHED AT THE TIME OF PRELIMINARY OR FINAL DEVELOPMENT PLAN APPROVAL.

The developer has submitted sketches of typical homes (included with packet) for this development. These designs include the use of stone, fiber-cement siding, decorative columns and stucco. The code speaks to limitations of units with garages oriented toward the street. These limitations include limiting garage extensions beyond the main wall of the dwelling and the overall percentage of the garage to the total dwelling width. The sketches provided are in compliance with these limitations and recommendations.

ADDITIONAL STAFF COMMENT: (See letter to Allenbrand – Drews dated 11/19/08 included with packet)

1. Section 17.332.E.3 – In a planned development, restrictions may be placed on the occupancy of certain premises. Country Hill Farms has been described and promoted to staff and the public by the owners as an "age oriented" or "age targeted" development. It is the intention of staff to recommend an ownership age minimum of 50 years of age be attached to the Phase I Final Plat and subject to review in the final platting of successive phases of the project.

2. Erosion and site runoff during the construction of the infrastructure and initial phases of home construction could become an issue. Temporary sedimentation basins on Tracts A, B & E should be constructed to help prevent site runoff. These temporary sedimentation basins would then be converted into the final BMP's as shown on the plans once the infrastructure improvements have been completed and the entire area has been reseeded and the grass adequately established.

3. Open areas of the development including Tracts A thru E are identified as being owned and maintained by the Home Owners Association. The development agreement or zoning approval conditions will require language of maintenance responsibility should the HOA fail to exist or fail to maintain its responsibilities. Maintenance of these areas are not to become the responsibility of the City of Spring Hill.

4. Comment from John Brann, City Engineer: "There will be a lift station required for the western portion of this development. It appears that this lift station will be installed at the southeast corner of Lot 50. You may want to check with Rory Hale, but I do not think the city will want a lift station on one of these lots. I think it may be better if it is installed on Tract B with an appropriate easement for the sanitary sewers and access. They should coordinate with the city during the development of the final drawings for this phase to make sure the lift station arrangement is acceptable to the City".

5. Transition Buffer to Large Lots (South): It is staff's understanding that the property boundary along the south side of the development contains a long and narrow strip of land on the south side of an existing fence line. It is also my understanding that this strip of land is to be individually deeded to the adjoining property owners and landscaping provided to enhance the buffer between the large and small lots. This area needs to be identified on the preliminary plan as well as the type of landscaping to be provided on each individual tract.

6. Landscape Plan: The legend containing tree species appears to be satisfactory however, the landscape plan does not identify what species will be planted at what location. Provide detail on the landscape plan to identify species of trees and specific planting locations. Realizing this landscape plan is a "concept" or "preliminary" this required detail may be submitted with the final landscape plan to be submitted with the final development plan.

7. A master landscape/fencing plan is required for the 25 ft. landscape easement along Columbia Road per 17.358.G.1.b. This required landscaping is to be identified in concept on the preliminary plan.

TRAFFIC IMPACT STUDY

Included with this staff report are excerpts from the original traffic impact study completed by TranSystems in January 2007, the updated report to this original study, and review comments from BHC Rhodes with respect to the updated study. The comments from BHC Rhodes have been forwarded to TranSystems for review. In addition, copies of the preliminary plan and all traffic study information have been forwarded to KDOT for review and comment. To date, comments from KDOT have not been received but should be available at the 12/4/08 meeting of the PC.

As noted in the accompanying letter from Susan Ratliff, traffic impact to the area is a concern to the area residents. Staff is also concerned with the increased traffic at 215th and K7/US169. The original study recommends a traffic signal at this location when considering existing conditions, plus the proposed development, plus the other nearby developments. Spring Creek is a development planned for the east side of Columbia Road. To date, the preliminary plat and first phase final plat have been approved, however development of the subdivision has not begun and the status is undetermined.

The K7 Corridor Management Plan called for closing the median crossing at 215th St. to allow only right turn movements. This closing was to be implemented with the completion of an extension of Columbia Road south to 223rd Street. Unfortunately this extension is no longer an option as KDOT funding for the preliminary engineering and right-of-way acquisition in no longer available, but it is possible for Spring Hill to reapply for this funding. The K7 Plan also provides for an overpass at 215th St. when traffic counts warrant this project, however no schedule is in place nor is there any funding available for this project.

STORM WATER MANAGEMENT, BEST MANAGEMENT PRACTICES (BMP'S)

Included with this report packet is a document and email from Tony Stanton. Mr. Stanton is a consultant for Spring Hill with regards to storm water management and has been involved with Country Hill Farms project for a considerable length of time. He was present at meetings with staff and the Columbia Partners development team and made suggestions for the implementation of BMP's to protect the area from storm water issues.

The comments from Mr. Stanton have been forwarded to Victor Burks for consideration and implementation into the development plan. To date I have not received any comments from Mr. Burks as to how the BMP's on the plan will be adjusted. Mr. Burks will be available at the meeting for comment and questions.

RECOMMENDATION:

Z-02-08 - Rezoning of Country Hill Farms from R-1 to RP-1

It is the recommendation of staff that the request for rezoning Country Hill Farms from R-1 to RP-1 be approved by the Spring Hill Planning Commission, and a recommendation be forwarded to the City Council for consideration at their meeting of December 18, 2008

PP-01-08 – Preliminary Development Plan, Country Hill Farms

It is the recommendation of staff that the Planning Commission approve the preliminary development plan, PP-01-08, for Country Hill Farms and a recommendation forwarded to the City Council for consideration at their meeting of December 18, 2008. Staff recommends this approval be subject to the following stipulations:

1. Consideration of comments from KDOT, TranSystems and BHC Rhodes with regards to the intersection of K7 and 215th Street be addressed in the final development plan and/or development agreement.
2. The comments from Tony Stanton, Olsson and Associates be reviewed and implemented into the final development plan as applicable.
3. The development agreement and/or final development plan address the "age oriented" concept of the development by including the minimum age of 50 years to residents of the First Phase of development and this restriction be subject to review in subsequent final phase submittals.

4. Park fees in lieu of open space are applicable at the rate of $300.00 per lot payable with the issuance of each residential building permit in the development.
5. The development agreement and/or final development plan indicate the responsible party for maintaining the open spaces including Tracts A, B, C, D & E in the event the Home Owners Association fail to exist or fail to properly maintain these areas in a responsible manner. The City of Spring Hill is not to be held responsible for maintenance of these private areas under any circumstances.
6. Adjustment of the location of the lift station shown on Lot 50 to Tract B.
7. The final development plan identify property along the south boundary of the development that is to be deeded to adjoining property owners along with details of landscaping and/or buffering to be provided by the developer.
8. The final landscape plan identify the following:
    a. Tree species at each location for street trees
    b. Landscaping and/or buffering in the 25 foot landscaping easement adjacent to Columbia Road
    c. Landscaping and/or buffering to be provided by the developer on the south side of 218th Street to be installed on an temporary easement to be obtained from the adjacent property owners, Joel and Shelly Frazier

END OF STAFF REPORT

Mr. Hendershot presented his power point presentation, which covered both the rezoning and preliminary plan. Ms. Squire asked Mr. Hendershot to point out the BMP (Best storm water Management Practice). He pointed out basins, filtration strips and rain gardens. Mr. Haupt asked the difference between a rain garden and a basin, and Mr. Hendershot described a basin as being designed to hold water for a period of time and let the water out slowly, where a rain garden lets the water soak into the ground, filtering the water as well. Mr. Hendershot noted that the developer will install 3 48 inch tubes to be placed under 220th St, to allow for the flow out from the basin. This area has been known to flood.

Mr. Stanton described a swale, which is a ditch that holds water and allows it to gradually infiltrate the soil down-slope, improving the soil structure. A filtration strip is a vegetated channel, planted with specific grasses, ten to twenty feet wide, that collects and retards the flow rate of runoff water areas. These areas can also offer significant water quality treatment benefits and are mowed about once a year, which will be Home Owners Association (HOA) maintained. Mr. Hendershot noted we have technical specifications for these areas.

The applicant, represented by Mark Epstein, an attorney with Rowen and Epstein law, was joined by the developer, Jeff House, the architect Victor Burks and Josh Thiede from TransSystems, and they are available for questions. Mr. Epstein thought Mr. Hendershot' presentation was extremely thorough. Mr. Epstein went over the items in the recommendation and agreed with those recommendations and they can accomplish the eight items listed.

Their marketing study indicated the "over 50" housing area is a viable product that people are looking for today. They have no objection to recommendation of staff. They respectfully request the recommendation for approval of the rezoning and preliminary plan.

Vice-Chair Sebasto opened the meeting for the public hearing and asked the members of the audience to keep comments focused and brief so all could speak.

Shelley Frazier of 21842 Columbia Road sent a letter to the commissioners, a copy of which was distributed to the Planning Commissioners prior to the meeting. Ms. Frazier's read her letter in its entirety, and the letter is at the end of the minutes as exhibit A. She also discussed landscaping on the south side of 218th St, and a temporary landscape easement to gain access to Frazier property for landscaping. She made a comment for Mr. Sellmeyer who is on the south side of the basin. He wanted the Commissioners to know that when the pond over flows, he will contact each commissioner, day or night.

Mr. Neil Sellmeyer of 22480 W. 220th St. sent a letter to City Hall for the Planning Commissioners, which was distributed to the Commissioners prior to the meeting, and is attached at the end of these minutes as exhibit B.

Joe Milkowski of 22471 W. 220th St. wondered why some issues are still undecided, such as traffic issues or water run off. What about emergency situations, where 215th St. or Columbia Road, being gravel, is blocked, emergency vehicles would have issues? Discussion of the pipe going under 220th street, he'd like to know where that water is going to go, the pipes will be on residential ground, and will it go to the creek? Or will the water just erode its way to the creek?

Susan Ratliffe of 23088 W. 220th St. submitted a letter and spoke to the Commissioners. Her biggest concern is traffic and emergency access to the development. An accident on either road would hinder an emergency situation.

Charles Boston of 22473 W. 215th St. is concerned with property values in the area. The values stated are below the average value currently in the area. The average house is on 3.5 to 5 acres. This will change all their lives for the sole reason of a developer making money.

Tim Gerrity at 23205 W. 220th St is concerned about the spring fed ponds and the redirection of storm water run off. Will those ponds dry up? How big of a park would $67,000 would be and it sounds like it's a cheap way to buy yourself out of providing green space. He's also worried about the number of cars on Columbia Road, as well as construction crews. He owns some maintenance provided units, and the $300 to $400 per month is average. They are in a location where it doesn't snow.

With no more comments from the public, Vice-chair Sebasto closed the public hearing. He asked for the questions raised to be answered.

Dan Walberg, one of the developers, of 14713 Juniper, discussed the square footage of the ranch homes that will range from 950 to 1,000 on the first floor, and 1,600 square foot maximum. Most will average 1,100 to 1,300 sq feet. Ms. Squire asked about other home styles. Some homes will be walk-out types that will have 900 – 1,100 and the lower level will be from 400 to 700. They want to limit stairs, and they are a reverse story and a half.

Roger Norris of Allenbrand-Drews spoke about the water basin on the south-east of the property. The detention basin is designed to restrict the flow coming off the subdivision, water leaving the detention basin will be no greater than it is today. The three 48 inch tubes under 220th St, will limit the water going over the road to a depth of 7 inches of water on the road, and will drain water from one side of the road to the other, limiting the amount that can build up. Mr. Hendershot asked where the water goes once it goes under the road. Mr. Norris said it was conveyed into a natural drainage area going south, as it does today. The tubes will improve the depth of water over the road in a hundred year flood. It will increase the flow, but it will be conveyed into the natural drainage area, and the study didn't show any flooding downstream per the regulations.

Mr. Stanton commented that even with the best management practices, more water will leave the site than does now, however, it will have no impact on ground water, more volume of surface water, flowing at the same rate as now, but it will flow for a longer period of time.

Mr. Norris explained the design standards adopted concerning the 100 year storm. That type of storm, which would have about 7.5 inches of rain in a 24 hour period, has a 1% chance to occur in a year, or once every 100 years.

Ms. Squire asked Mr. Hale about the size and quantity of the pipes, wondering if it will handle the flows. Mr. Hale noted there were still many details that will be worked through and all questions will be addressed.

Dan Walberg described Dan Whitney, who is a developer with Land Marketing and was recommended by Mr. Walberg's lender. Mr. Whitney supplies information to banks and lending institutions. He commented on the drastic decline of new home starts, the current discounting on single family housing, and pointed out the lack of new starts in

the last year. The fastest growing segment of the housing market is the downsizing baby boomer segment. He has several other subdivisions of this type, and the highest maintenance rate is $72. This project won't compete with the existing inventory; and the age target community will be unique to Spring Hill since Mr. Walberg is not aware of any other communities like this in the City. They would like to sell houses ranging from $130,000 to $170,000.

Mr. Haupt asked about the enforcement of the 50 and over community. City Attorney Jenkins believes it can be enforced as part of the covenant description in the Homes Association. But it is not perpetual, and could be changed with legal steps. They would have to come to the City to make changes.

Ms. Squire asked if Mr. Walberg was familiar with the "for sale" homes at the age restricted Blackhawk area, as well as the rental units for the seniors off Lawrence Ave and off S. Main St. He said he was not. Ms Squire questioned the City Attorney and Mr. Hendershot about the process required if the HOA was no longer viable. Would age restriction also apply for ownership as well as occupancy? Mr. Hendershot said the HOA would also have to agree with the change if it is viable, and Staff can work on the wording to try to ensure the plan is followed. Ms. Squire also asked about children, would they be allowed?

Mr. Haupt asked the developer what amenities the City would receive for allowing the developer to have a more dense development. The developer noted they will use high class house finishes of stucco and rock, columns, and will install a landscape buffer on the land to the south to buffer for the large lot transition. Mr. Haupt asked about the street abutting the Frazier property. The developer located the street there assuming further development would require an additional road out to Columbia Rd. Mr. Haupt asked about the time frame to build out the subdivision, and the developer hoped for a 5 year process. Mr. Haupt wondered if they would consider rezoning a portion of the area. The developer would see the project rise in value and the amenities offered, with landscaping buffers provided on the south side, and all the sidewalks will connect, and the walking trail will include areas to sit. Amenities will also include the rain gardens with benches, and gazebos.

Mr. Haupt would like to see the full 15% of the green space used with some of it being used by the large lot transitioning. The developer feels that two pine trees in every lot should be a good buffer over time. He also says that each house is at least 250 feet from the subdivision. Mr. Haupt agreed, but it's a matter of perception. The developer also discussed the property on the south side of the subdivision, owned by Columbia Partners, which they will deed to the property owners, as part of the buffering plan. He also discussed purchasing additional property to enable them to have a second entrance off Columbia Road. The developer noted that the development of the sewer system equates to the development of the land.

Motion by Brian Haupt for a 5 minute recess
Seconded by Cindy Squire. Motion passed unanimously. The meeting resumed at 9:40.

Mary Nolen left the meeting at this time.

Mr. Haupt had answers to his questions except the lack of green space. Ms. Squire listed amenities as the walking trails, the rain gardens and gazebos.

Ms. Houpt noted her major concern is the one street to exit out of the area on to U.S. 169 is 215th St. She would like to know what the developer is planning to do to solve this issue. Mr. Hendershot noted that access to U.S. 169 is controlled by the state. He feels that would be hard to get KDOT to agree to that.

Josh Thiede, the traffic expert from TransSystems, said he can answer questions on the scope of their study, which shows 215th St. as a failing condition now. The study suggests a left turn lane as well as a traffic light, which is up to KDOT to approve that action. Nearby developments were also included in the study. Cars are backed up already; KDOT has looked at the figures, and does not feel a traffic light is warranted. KDOT will continue to monitor and when the conditions change, they will react at that time.

Mr. Hendershot noted that discussion of Columbia Road have been vague at this point. There are multiple aspects for the full development of Columbia Road to the south point of Country Hill Farms, so due to the preliminary nature of this project, they felt this can be further refined in the next step of the development process. Ms. Squire still is concerned with emergency access as things stand now. She's not sure the road base on Columbia road can take the traffic. She doesn't understand what we can do about that major problem. Mr. Hendershot said that without a doubt, Columbia road will be improved to City standards. It still needs to be discussed with many entities.

Mr. Kiesling talked about the buffering with large lot to small lots in a subdivision. The building regulations are intended to protect the people and property that are already there, not the developers. He has never seen a subdivision with only one entrance, and he feels it is a very dangerous situation. It has come up with many subdivisions prior to this project, and before any more development takes place, this problem needs to be solved.

Ms. Houpt feels people would take one point of access as a negative consideration before they buy a home in this subdivision. Mr. Walberg thought it would cause an inconvenience, but did not feel it was critical. He feels many people have to wait to get onto U.S. 169 just to get out of Spring Hill. He said the subdivision on the east side of U.S. 169 doesn't seem to have a problem. The developer feels they have done everything they can do to create a quality development.

Mr. Hendershot noted that funding from KDOT is no longer available to improve Columbia Road. In 2007, it was estimated to cost over $3 million. Steve Bachenberg of BHC Rhodes discussed previous plans to extend Columbia Road and some of the issues resulting from that.

Mr. Burks talked about the fact that the sanitary sewer district was built and that means development will have to follow so the sewer can be paid off. The issues of access and traffic will have to be resolved or there will be no one to pay the bonds off for the sewer.

Ms. Squire brought up the question of building slab homes with no basements and no storm shelters. Mr. Hendershot noted that we don't have any regulations that consider that item. The developer said that was a matter of choice, and safe rooms are also an option for some.

Vice Chair Sebasto went over the options for the commission. The Commissioners felt they won't complete the discussion of the preliminary plan tonight, but they could proceed with the rezone. Mr. Sebasto thought they should rule on them together and not split them up.

> **Motion by** Bill Kiesling to continue the rezoning and the preliminary plan for Country Hill Farms to the next meeting on January 8, 2009 to allow time for staff to clarify the key points of access, and buffering from large lot to small lots in a subdivision.
> **Seconded by** Brian Haupt. Motion passed 5 yes; 0 no; 0 abstention

Mr. Haupt noted that property owners will be given a chance to speak at the next meeting. Mr. Jenkins noted that at the close of the hearing, that's the time the 14 day protest period will start.

ADJOURN

> **Motion by** Bill Kiesling to adjourn.
> **Seconded by** Valerie Houpt. Motion passed 5 yes; 0 no; 0 abstention

The meeting ended at 10:30 PM

_____

Mary Nolen, Planning Secretary

Zoning Members

This letter is in regards to Country Hills Farms–Columbia Properties LLC–proposed RP-1 community planned at 218th and Columbia Road.

I am Shelley Frazier one of the adjacent homeowners–my property is located at the southeast corner of proposed subdivision–Many of you are familiar with me for I have been coming to zoning meetings now for some 3 years.

I have many concerns, and what would make me happy would be homes on 5 acre tracts–but I know this is not possible. For the last several years we (meaning adjacent homeowners and city staff)have been pushing for transition lots along large rural properties–this particular developer has fought us from day one–and had final plat for previous R-1 denied because of refusal to adhere to city requests (I know this was not the only reason for denial)–Why does this developer think that we now would be happy with lot reduction????

His statement is now that with a planned community targeted to 50+ we would have less traffic and no children. I don't know about where you work but I work for a large retailer and our target for employees is 40% full timers and 60% part-timers –Guess what demographic the majority of our part-timers come from ??—retired work force. Therefore that blows the reduced traffic flow theory. In our neighborhood meeting (now required prior to preliminary plat)-A question was asked on how could we be guaranteed 50+ only homeowners? This was not answered satisfactory for me–It was stated if a person wanted to buy a parcel and was not 50+ he could purchase it. How could they stop him or her.

In this community prices would range from 130,000 to 170,000. Adjoining properties range from 199,000 up. I know as a homeowner I would like adjacent properties to be of equal or greater value. Majority of his homes will be 2Br 2 Bath on slab foundations with a 1car garage or 2 car garages–He states further back in subdivision may be as large as 3 Br and 2.5 bath with basements and 3 car garages. I personally prefer the later for the whole division –bringing the property values up.

This is the first time this developer has attempted a planned community–I do not feel he knows what he is getting into–In his meeting he stated maintenance provided–has he done any pricing on what it takes a homeowners association to maintain roads and turf. He stated homes association dues are expected to be $60.00 per month. I know what it takes-I used to bid turf maintenance and snow removal and $60.00 per month gets you nothing. My mother lives in a maintenance provided community homes ranging from $230's up–her homes association dues are $150 per month. This gets her grass mowed and fed and snow removal–she is responsible for her irrigation system and bush and tree trimming and leaf removal after mowing season is done. Her trash is provided by the city at no charge, water and sewer are on her.

As for traffic– currently Columbia Road is a gravel/dirt goat trail and has approximately 20 residences using this road for in /out travel. On average figure 2 cars in and out 2x's per day–or 80 trips per day. Add in the Spring Hill City trucks, UPS, Fed-EX , DHL—10 additional trips= 90 trips per day—That is 90 vehicles currently exiting on to 169Hwy –with 75% of trips going Northbound on 169.

Now your planning on adding 227 more households to mix–say 1.5 cars per household 2x's per day= 1362 trips per day (These are my figures)—Figures that have been provide to you are 2121 trips per day with and additional 161 cars at peak AM Hour and 215 at peak PM hour---- potentially 181 to 235 cars trying to exit Columbia Road ----I imagine most of these cars will be going northbound. Imagine being stuck in that traffic trying to access 169hwy to go northbound like you have done every day for the last 20 years.

Just changing from original plan which had 1667 trips per day to current plan of 2121 trips per day–you will be approving an additional 454 trips per day trying to get on 169 hwy

By the way how many of you are aware of the potentially deadly accident that occurred the week prior to Thanksgiving at the intersection of 207th and 169Hwy—I don't know the particulars–but from appearance it looked to be that a vehicle was trying to cross 169 and got clipped and was spun around and flipped–Suv or Minivan upside down with cab crushed into ground. (and this is without a major subdivision gaining access to 169)

As for who is responsible for improvements to Columbia Road–I don't believe the developer again has a clue to his cost–being that there are several ententies??? who would be sharing the burden of cost- Columbia Properties, City of Spring Hill, Miami Co and the developer of vacant land to the east. At this time developer is not planning any improvement to Columbia Road–just contributing to a road fund–Who is going to buy a house in a planned community in which you can only gain access to by a gravel road????

In the last 6months we have had emergency personal on our road Columbia and 220th at least 3 times----Imagine emergency personnel trying to go down Columbia road during peak travel hours with 181 cars trying to exit

Last but not least —the developer is addamit?? about placing a road on my rear property line–I am a earth contact home whose roof line is at ground level–my concern is cars coming down the slight grade of Columbia Road and missing the turn and coming through the roof of my home, (There is approximately 60 feet from property line to structure). I would like to see some form of concrete wall or iron fence to act as a barrier–of which I would like to see this landscaped to reduce the traffic noise.

I could go on and on–but this is enough–

Thank you for time

Shelley Frazier

We moved out here for the quiet and solitude that the country provides–with close proximity to the city–Over the years the solitude has been invaded on–more highway noise, light pollution - from Black Hawk and Lights from 223rd st overpass , the wildlife reduction (we used to have more red foxes, bobcats, deer and woodchucks) and the Bears and Lions growl no longer (Yes we used to have bears and lions on 223rd st)–How much more are you going to take away from us???? Think it over

11-10-08

To whom it may concern my name is Neil Sellmeyer 22480 W. 220th
I know we can't stop growth or progress However I am highly concerned ~~with~~ with the rezoneing of this project. Also some of ~~us~~ us neighbors have livestock and machinery this creates a large liability with houses children and people ~~has~~ in general living to the north of me and ~~others~~ others I am assuming there will ~~be~~ be some tall barrier between us and them. Perhaps a tall fence or burm. We live in a country setting and would like to maintain that as much as ~~possible~~ ~~possible~~ we could. personally I don't want to even see this project from my backdoor.

Thank U.
Neil Sellmeyer
22480 W 220

P.S I expect to receive a Copy of the ~~minutes~~ minutes of this meeting

November 20, 2008

Dear Janet,

Along with some of our other neighbors, I attended the meeting with the developer on November 10th for the Country Hills Farms subdivision (216 houses) that they want to put in on Columbia Road at 215th street.

Here are some of the concerns that I have after the meeting:

1. If you can decipher the traffic study, you will notice that at the peak morning hour traffic time there will be approximately 161 vehicles trying to enter and exit on Columbia road. That means there will be vehicles solidly packed from the entrance of the subdivision clear up to 169 highway. If there happened to be an accident at that time, Columbia road could easily be blocked. Then, if there was another emergency at the same time, either in the subdivision or on down where we live, there would be no way for emergency crews to get to it. If I understood the developer correctly, the plans for the overpass at 215th street and the plans for an extension of Columbia road down to 223rd have been rejected. Also, the developer is not required to make those kinds of improvements. If he gets permission to build, our only recourse is to get the City or the County to do something. The developer can build the subdivision and just walk away. The traffic problems are not his responsibility.

2. There will be a holding pond to collect the runoff from the subdivision located in the Southeast corner of the subdivision. This pond will, I believe, overflow at some point. As far as I could see, there is no way – and no plan – to keep that water from overflowing on to the nearest neighbor to the south, right on down to 223rd and washing out the road. His statement to that was that at least it would be clean water running through the yard and over the road..... One of us said that the fact that it would be clean water doesn't matter if it is your yard it is running through.

3. The footage at the back of the properties to the south of the subdivision, that the subdivision owner claims to own, will be deeded back to the owners. This is a nice gesture, but, I believe, by the Kansas statute of Adverse Possession, after 10 years if it is uncontested and maintained as part of the property, then we already own it. My lot at least, was surveyed and marked in 1977. The markers are still there, I had it checked by another surveyor. By Kansas statute, that footage has belonged to my property for the last 20 years. He can't touch that area without my permission.

4. The developer made it clear that this new plan for 216 houses is the only feasible plan – that is for him to be able to recoup his investment. It is not the

only feasible plan for that piece of property, and it is not our responsibility to see that he gets his money back. I personally, would have understood 25 or 30 houses going in there. That would be similar to what we currently have here, and I think that Columbia Road could handle 25 cars or so in the morning. Highway 169 at 215th is already a scary proposition at 7:30 in the morning, so even 25 more vehicles are going to be an issue. 161 vehicles seems impossible!

5. How much new housing and/or vacant lots in new subdivisions are currently available in Spring Hill, and do we need to develop more at this time given the current economy? Also, how much taxpayer money is the City willing to spend on a new development right now? This one in particular seems to have more than it's share of logistical problems to contend with.

I understand that the first meeting on this at the Planning Commission is on December 4th at 7:00 p.m. and that the zoning needs to be changed again to make this new plan work. I fervently hope that you and all the City Commissioners and Planning Commission Members take a long hard look at developments along Columbia Road and 215th street. Columbia Road is the only way in and out of our neighborhood. My husband and I both remain deeply concerned about our neighborhood and quality of life, as well as our safety in getting to and from work. We are both very much against this plan and the one that was presented before, as are most if not all of our neighbors.

Thank you very much for your time and consideration.

Sincerely,

Susan Ratliff

Susan Ratliff
23088 W 220th St
Spring Hill, KS 66083
913-686-3835
susanratliff@yahoo.com

SPRING HILL PLANNING COMMISSION
SITE PLAN STAFF REPORT

Case #: SP-05-08 **Meeting Date:** January 8, 2009

Description: Proposed Site Plan – VPSA Oxygen Plant

Location: 20400 N Webster St.

Applicant: AGC Flatglass

Engineer: Rusell Pollom

Site Area: 63.8 Acres

Minimum Lot Area: No Minimum

Current Zoning: "M-1" General Industrial **Proposed Use:** VPSA Oxygen Plant

Related Applications:

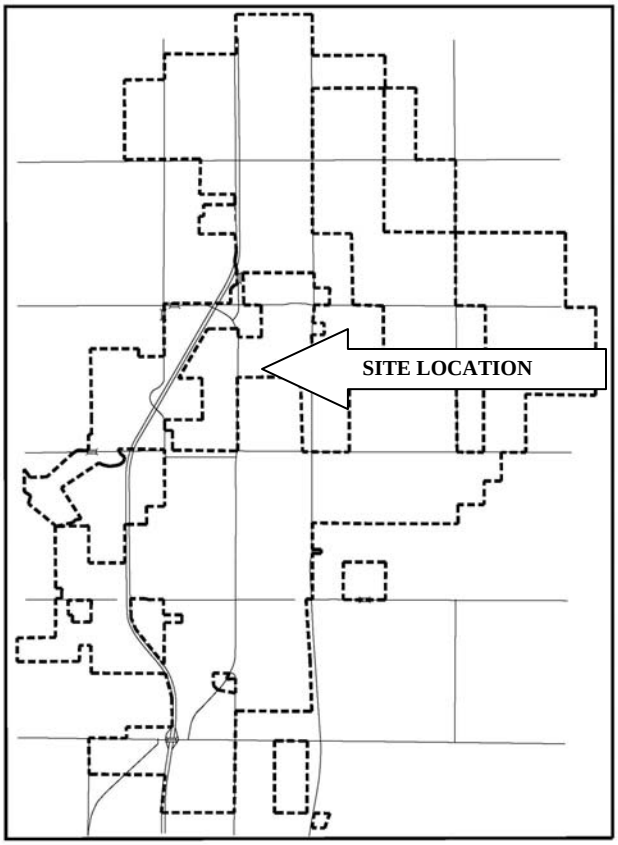

BACKGROUND:

The applicant, AGC Flatglass, has submitted a site plan application for a VPSA Oxygen Plant located at 20400 N. Webster Street. The proposed 150' x 50' plant will be installed on the north side of the existing plant approximately 160 feet from the north property line. A copy of the site plan is included with this report.

STAFF COMMENT:

Pure oxygen introduced into the furnace system is a vital element in the production of flat glass. Currently AGC has oxygen delivered to the facility utilizing several trucks per week. The proposed VPSA plant will produce the oxygen needed for the plant and nearly eliminate the need for truck deliveries of oxygen.

The facility is manufactured off-site and assembled at the plant. It is equipped with a back up system in case of production failure and the existing oxygen storage tanks at the plant will be removed.

Employees of the plant have been in contact with utility providers and are developing the needed systems to power the plant. In addition, Johnson County Fire District #2 has been provided with information on the plant and asked to comment.

In addition to the above noted items the site plan has been reviewed for conformance with the Spring Hill Comprehensive Plan as follows:

- The proposed project is in conformance with the provisions of the zoning code and subdivision regulations as the installation is in connection to an existing industrial facility in an industrial zoning district.

- Compatibility with the surrounding neighborhood is an issue of initial concern from a noise emission standpoint. As noted in communications from the manufacturer, most of the plant is .enclosed within a building. In addition, the project scope includes an intake silencer and discharge silencer. The silencers along with the building will provide the required noise level suppression. Information on acceptable noise levels in residential neighborhoods is also included with this packet. Currently the nearest residential neighborhood is approximately one/fourth mile north of the project and the proposed plant will not create objectionable noise pollution for this development. Protection of future developments will be provided by the silencers and buildings.

- The proposed site plan would be in conformance with the Spring Hill Comprehensive Plan, which shows the parcel as Industrial on the Future Land Use Map.

- The proposed project is in conformance with customary engineering standards used in the City.

RECOMMENDATION:
It is the recommendation of staff that the Planning Commission recommend approval of the site plan SP-05-08 as presented.

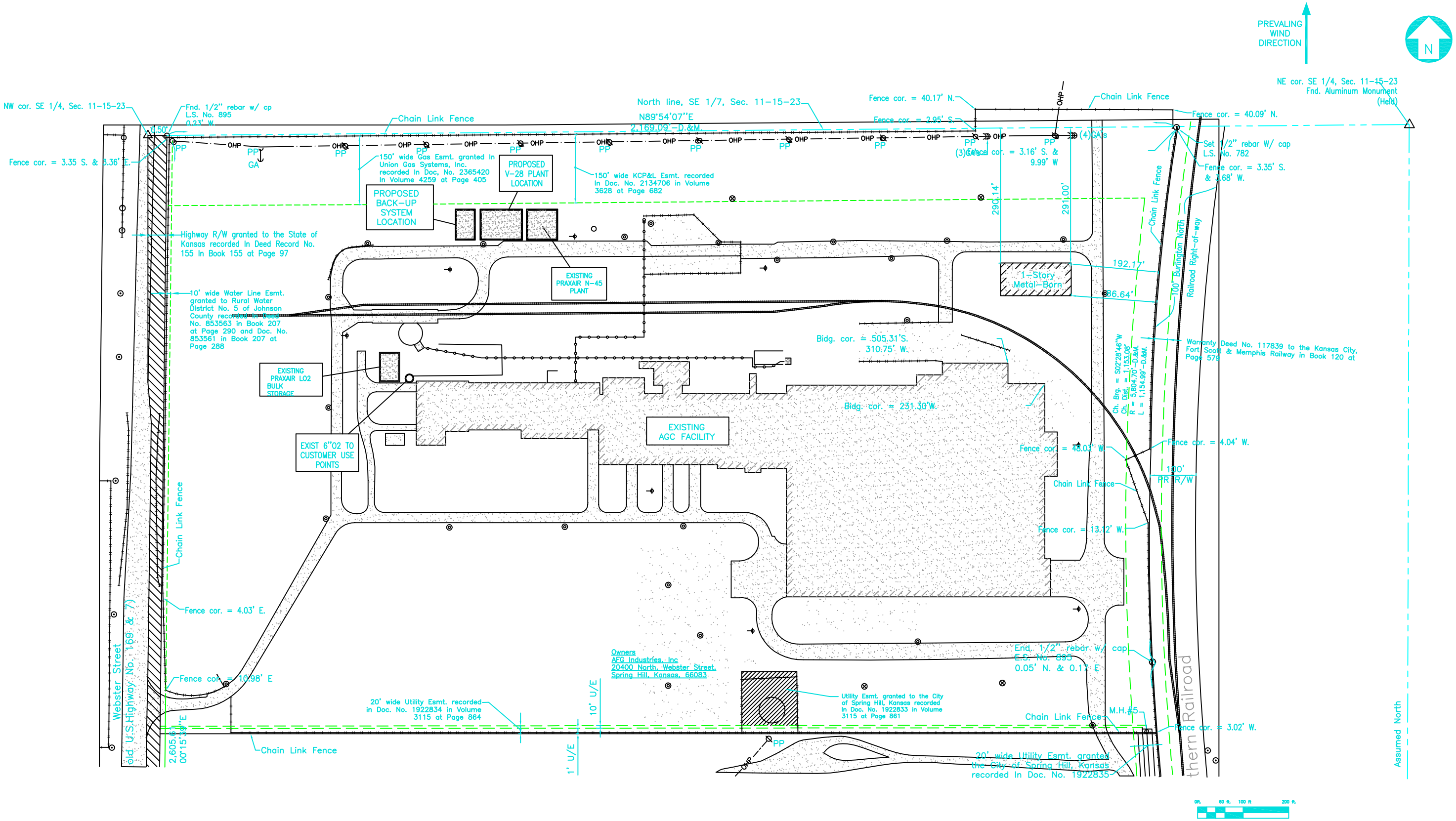

QUAN.	PART OR DWG. #	DESCRIPTION	ITEM

REV.	DESCRIPTION	NAME	DATE	USED ON PROJECT

EQUIP. #

THIS DRAWING IS THE PROPERTY OF AGC FLAT GLASS NORTH AMERICA AND MUST NOT BE REPRODUCED OR COPIED WITHOUT WRITTEN PERMISSION FROM AGC.

UNSPECIFIED TOLERANCES ([ ] DENOTES MM)

INCHES	+/-	[MM]	+/-
0.00	0.03	[0.0]	[0.8]
0.000	0.005	[0.00]	[0.13]
0.0000	0.0005	[0.000]	[0.013]

DRAWN BY xx xx-xx-xx DWG. REF.
CHECKED SUPERSEDES
APPROVED SUPERSEDED BY

AGC
FLAT GLASS NORTH AMERICA

SPRING HILL PLANT
20400 N. WEBSTER
SPRING HILL, KANSAS

DWG. TITLE
OVERALL SITE PLAN
AGC FACILITY
SPRINGHILL KS
SHEET 1 OF 3

DWG. SCALE 1in=100ft.0in. DWG. NO. 13698B-010 SHEET 001 REV 1

FOR REFERENCE ONLY

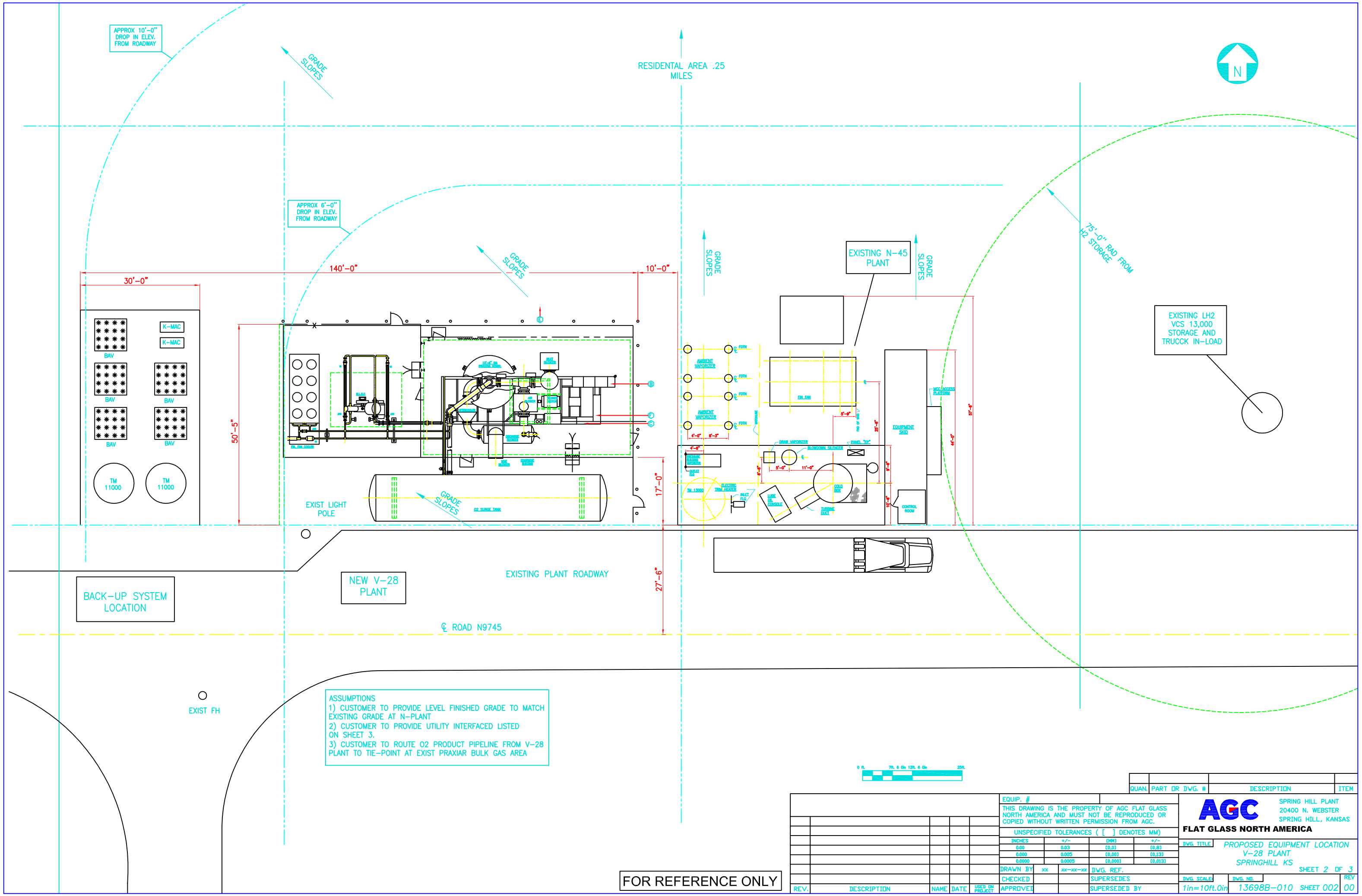
APPROX 10'-0" DROP IN ELEV. FROM ROADWAY
GRADE SLOPES
RESIDENTAL AREA .25 MILES
N
APPROX 6'-0" DROP IN ELEV. FROM ROADWAY
GRADE SLOPES
GRADE SLOPES
GRADE SLOPES
EXISTING N-45 PLANT
GRADE SLOPES
75'-0" RAD FROM LH2 STORAGE
EXISTING LH2 VCS 13,000 STORAGE AND TRUCCK IN-LOAD
30'-0"
140'-0"
10'-0"
50'-5"
17'-0"
27'-6"
K-MAC
K-MAC
BAV
BAV
BAV
BAV
BAV
TM 11000
TM 11000
EXIST LIGHT POLE
GRADE SLOPES
O2 SURGE TANK
AMBIENT VAPORIZER
AMBIENT VAPORIZER
FIN. FAN
EQUIPMENT SKID
MOD / ACCESS PLATFORM
DRAIN VAPORIZER
BLOWDOWN SILENCER
PANEL "DP"
TM 13000
ELECTRIC TRIM HEATER
INLET FLG
LUBE OIL CONSOLE
COLD BOX
TURBINE DUCT
CONTROL ROOM
57'-6"
41'-3"
25'-6"
5'-0"
11'-0"
6'-6"
6'-6"
10'-6"
EXISTING PLANT ROADWAY
NEW V-28 PLANT
BACK-UP SYSTEM LOCATION
℄ ROAD N9745
EXIST FH
ASSUMPTIONS
1) CUSTOMER TO PROVIDE LEVEL FINISHED GRADE TO MATCH EXISTING GRADE AT N-PLANT
2) CUSTOMER TO PROVIDE UTILITY INTERFACED LISTED ON SHEET 3.
3) CUSTOMER TO ROUTE O2 PRODUCT PIPELINE FROM V-28 PLANT TO TIE-POINT AT EXIST PRAXIAR BULK GAS AREA
0 ft. 7ft. 6 0in 12ft. 6 0in 25ft.
QUAN. PART OR DWG. # DESCRIPTION ITEM
EQUIP. #
THIS DRAWING IS THE PROPERTY OF AGC FLAT GLASS NORTH AMERICA AND MUST NOT BE REPRODUCED OR COPIED WITHOUT WRITTEN PERMISSION FROM AGC.
UNSPECIFIED TOLERANCES ([ ] DENOTES MM)
INCHES +/- [MM] +/-
0.00 0.03 [0.0] [0.8]
0.000 0.005 [0.00] [0.13]
0.0000 0.0005 [0.000] [0.013]
DRAWN BY xx .xx-xx-xx DWG. REF.
CHECKED SUPERSEDES
APPROVEI SUPERSEDED BY
REV. DESCRIPTION NAME DATE USED ON PROJECT
AGC
FLAT GLASS NORTH AMERICA
SPRING HILL PLANT
20400 N. WEBSTER
SPRING HILL, KANSAS
DWG. TITLE
PROPOSED EQUIPMENT LOCATION
V-28 PLANT
SPRINGHILL KS
SHEET 2 OF 3
DWG. SCALE 1in=10ft.0in
DWG. NO. 13698B-010 SHEET 002
REV 00
FOR REFERENCE ONLY

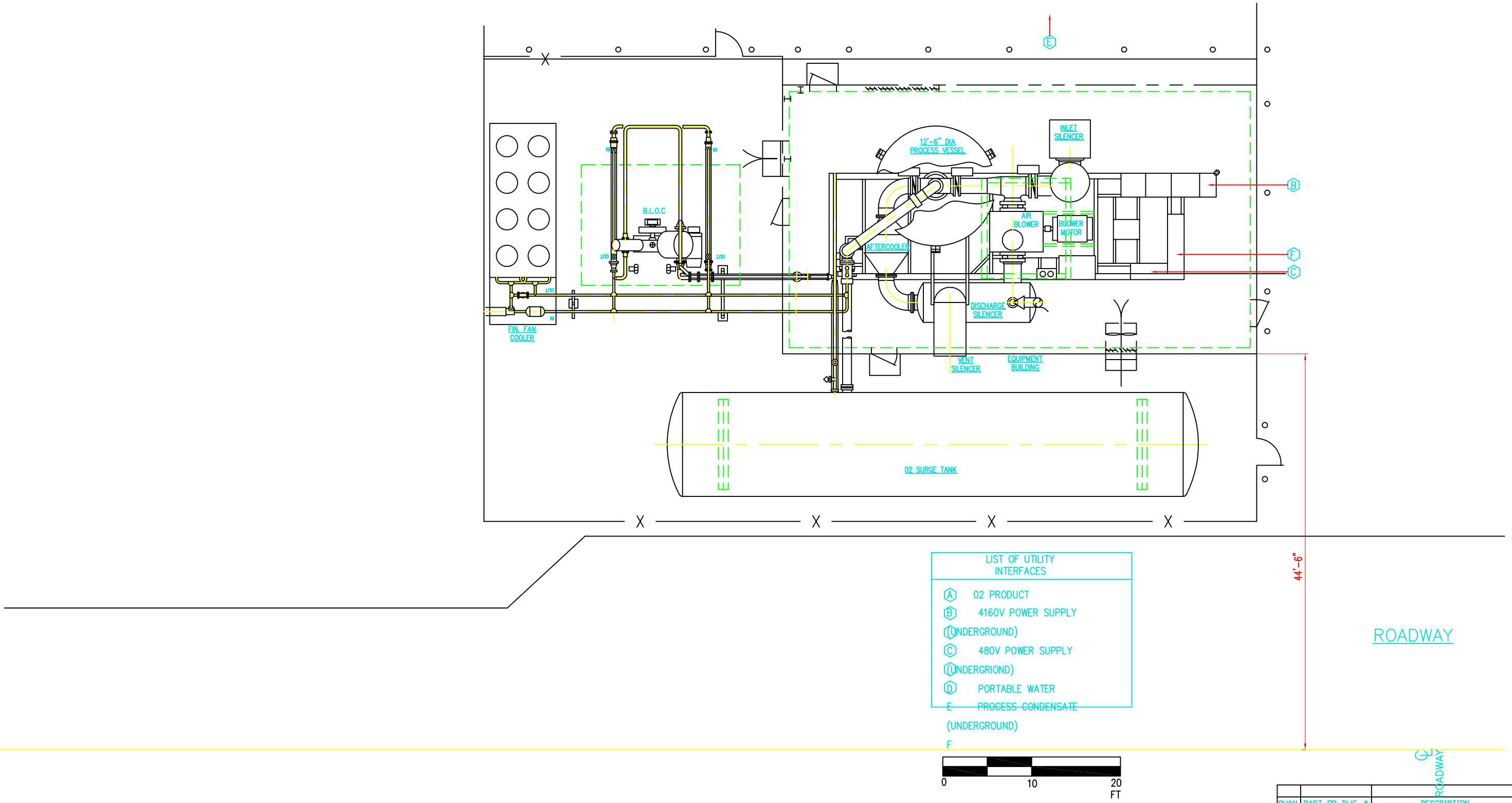

QUAN.	PART OR DWG. #	DESCRIPTION	ITEM

REV.	DESCRIPTION	NAME	DATE	USED ON PROJECT

FOR REFERENCE ONLY

EQUIP. #

THIS DRAWING IS THE PROPERTY OF AGC FLAT GLASS NORTH AMERICA AND MUST NOT BE REPRODUCED OR COPIED WITHOUT WRITTEN PERMISSION FROM AGC.

UNSPECIFIED TOLERANCES ([ ] DENOTES MM)

INCHES	+/-	[MM]	+/-
0.00	0.03	[0.0]	[0.8]
0.000	0.005	[0.00]	[0.13]
0.0000	0.0005	[0.000]	[0.013]

DRAWN BY	xx	xx-xx-xx	DWG. REF.
CHECKED			SUPERSEDES
APPROVED			SUPERSEDED BY

AGC
FLAT GLASS NORTH AMERICA

SPRING HILL PLANT
20400 N. WEBSTER
SPRING HILL, KANSAS

DWG. TITLE: EQUIPMENT LAYOUT
V-28 PLANT
SPRINGHILL KS

SHEET 2 OF 3

DWG. SCALE	DWG. NO.		REV
3/16"=1'-0"	13698B-010	SHEET 003	00

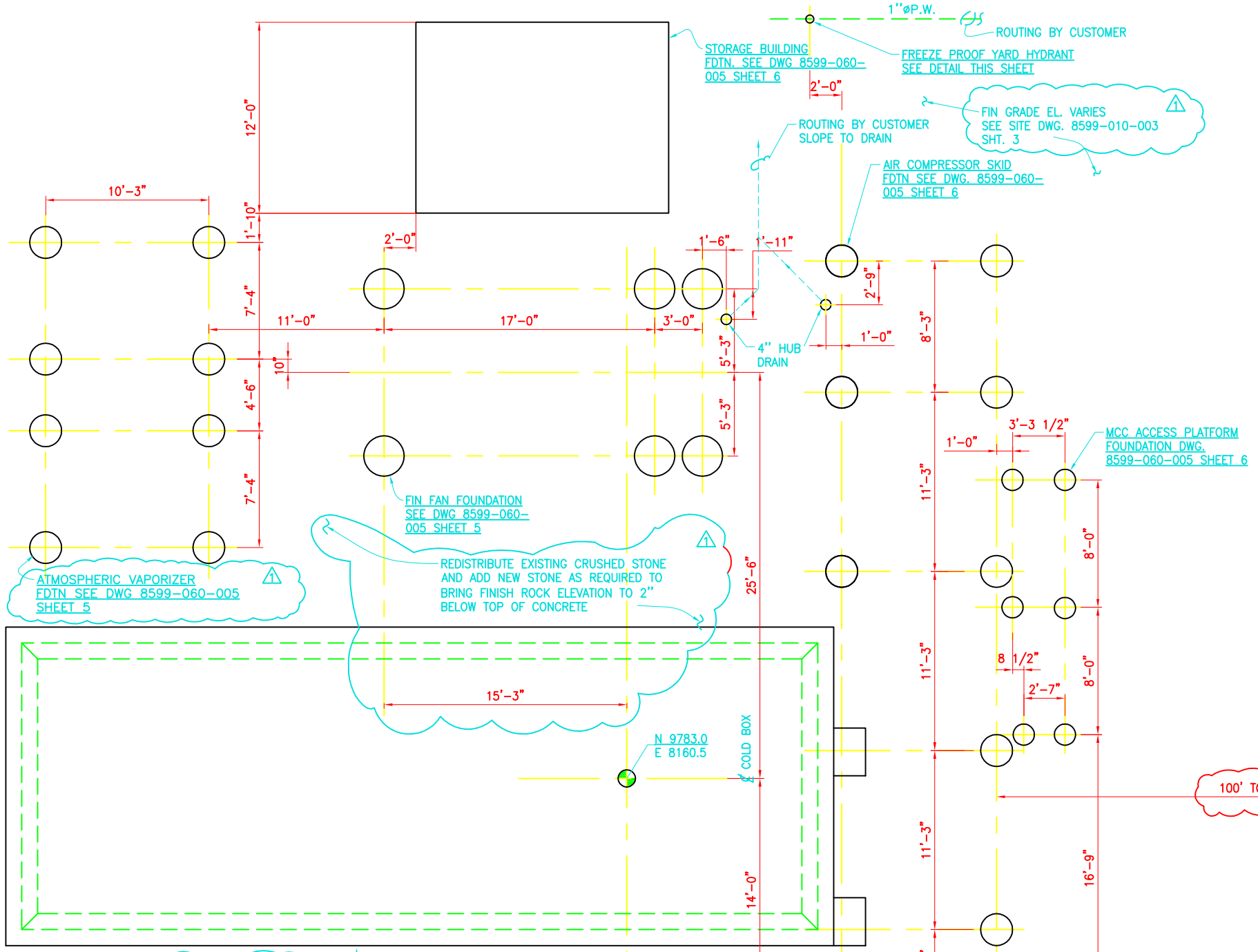

ROADWAY

CRUSHED STONE AREAS

1. Subgrade
   1. Excavate, prepare as required for proper installation of crushed stone.
   1. Remove soft unsuitable material which will not compact readily when tamped. remove or break off all loose rock encountered to a depth of eight inches or more beloe subgrade surface. Replace removed materials with suitable new materials. subgrade to be well tramped with pneumatic tampers in all areas where materials have been replaced, added or distributed.

2. Aggregates
   Crushed stone consisting of clean, durable, sharp angled fragments of rock (including iron ore tailings) of uniform quality throughout, free from thin or elongated pieces, soft or disintegrated stone, dirt or other objectionable materials. Cravel Hardheads retained on a four inch screen and then crushed will be accectable as crushed stone providing such crushed hardheads shall meet graduation requirements fo rtype of stone spicified.

3. Gradding
   Crushed stone shall be graded in accordance with the following table:

Gradding	Percent by Weight
Passing 1 inch screen	100
Passing 1/4 inch screen	30–50
Passing no 200 sieve	0–5

4. Placing
   No segregation of large or fine particles will be allowed, but the crushed stone as spread shall be well graded with no pockets of fine materials. Depth of finished crushed stone; as shown and specified on the drawings, true to grade and cross section, uniformly spread, either by hand labor or by an approved mechanical device. Any depressions shall be satisfactorily eliminated.

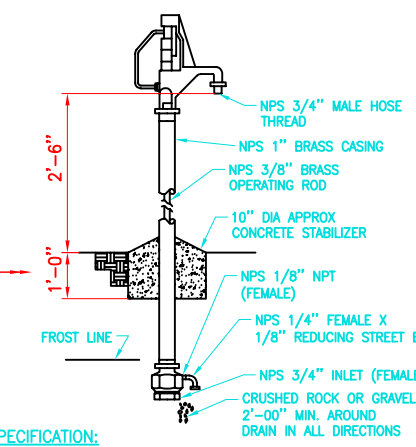

SPECIFICATION:
MODEL Y34 WOODFORD/10WA, OR APPROVED EQUAL, FREEZE PROOF YARD HYDRANT WITH BRASS CASING AND BRASS OPERATING ROD. 3/4" INLET AND OUTLET CONNECTIONS, TEFLON IMPREGNATED PACKING WITH ADJUSTIBLE PACKING NUT, AUTOMATIC FLOW FINDER AND PROVISION FOR LOCKING AGAINST OTHERS INCLUDE.
WADE W-8610 (KEYHANDLE)
JOSAM SERIES NO.71400 (OR 1700 HANDWHEEL)

FREEZE-PROOF YARD HYDRANT

FOR REFERENCE DRAWING SEE DWG. 8599-060-005
SHEET 1

QUAN.	PART OR DWG. #	DESCRIPTION	ITEM

REV.	DESCRIPTION	NAME	DATE	USED ON PROJECT

EQUIP. #

THIS DRAWING IS THE PROPERTY OF AGC FLAT GLASS NORTH AMERICA AND MUST NOT BE REPRODUCED OR COPIED WITHOUT WRITTEN PERMISSION FROM AGC.

UNSPECIFIED TOLERANCES ([ ] DENOTES MM)

INCHES	+/-	[MM]	+/-
0.00	0.03	[0.0]	[0.8]
0.000	0.005	[0.00]	[0.13]
0.0000	0.0005	[0.000]	[0.013]

DRAWN BY	xx	.xx-xx-xx	DWG. REF.
CHECKED			SUPERSEDES
APPROVE			SUPERSEDED BY

AGC
FLAT GLASS NORTH AMERICA

SPRING HILL PLANT
20400 N. WEBSTER
SPRING HILL, KANSAS

DWG. TITLE: LOCATION PLAN
NITROGEN PLANT
SPRING HILL, KANSAS

SHEET 3 OF X

DWG. SCALE	DWG. NO.	REV
1/4"=1'-0"	8599-060-005 SHEET 003	00

FOR REFERENCE ONLY

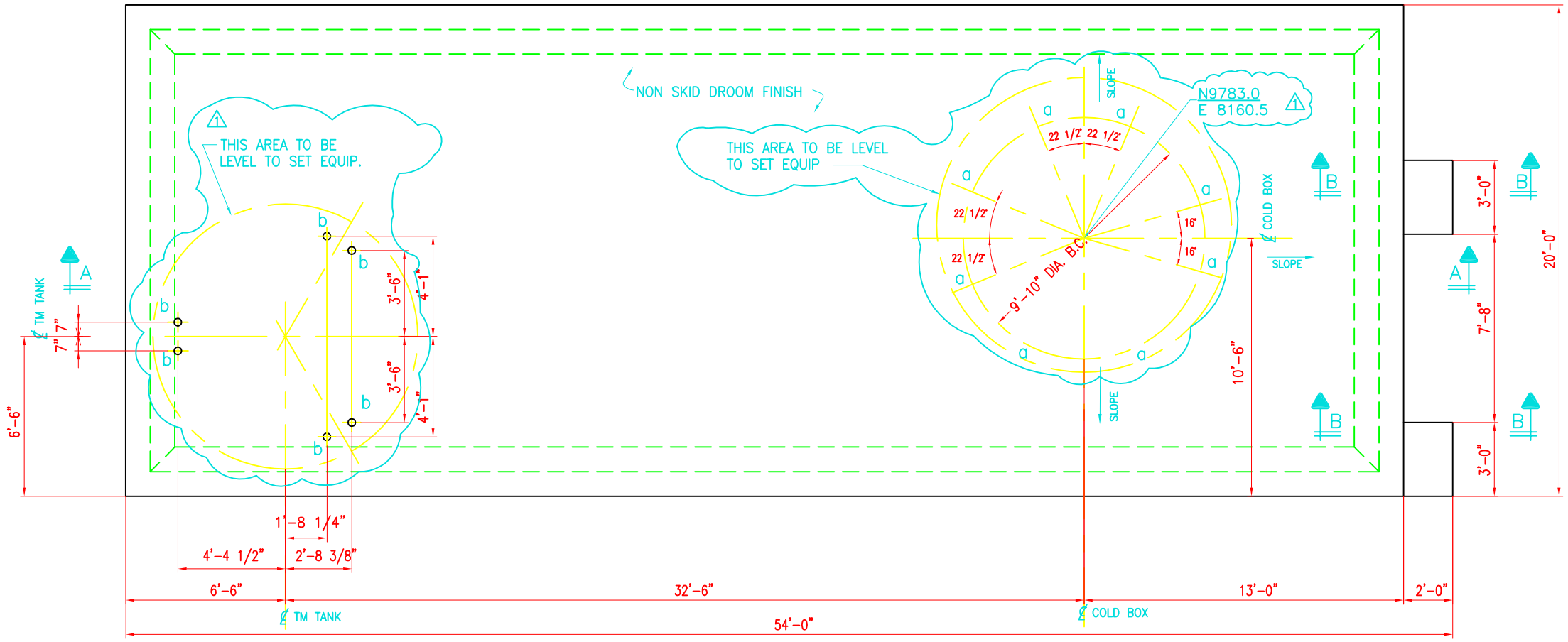

PLAN

SCALE 3/8"=1'0"

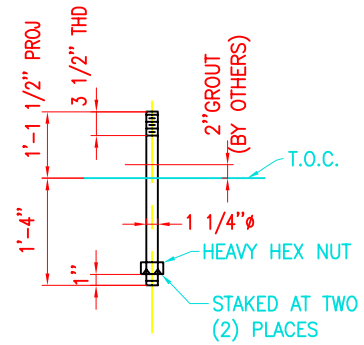

ANCHOR BOLT NK "a"

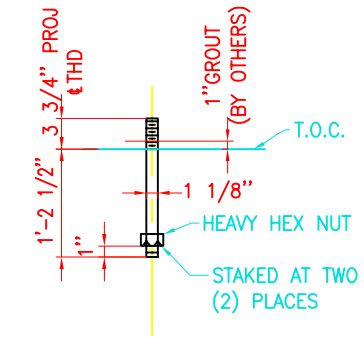

ANCHOR BOLT NK "b"

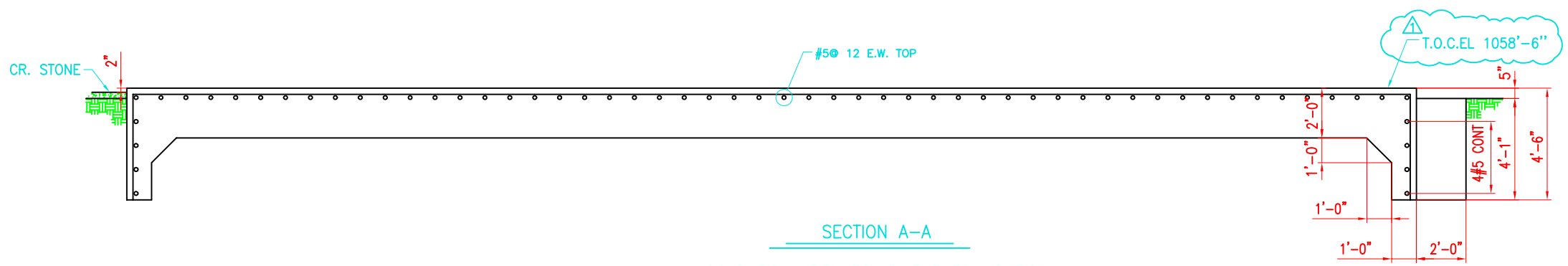

SECTION A-A

COLD BOX AREA EQUIPMENT FOUNDATION

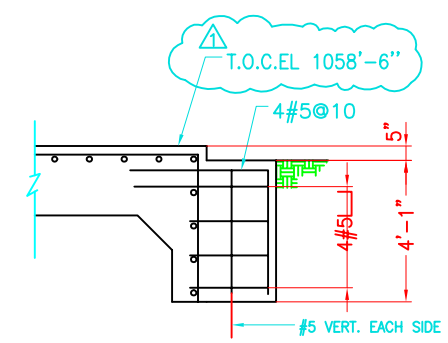

SECTION B-B

FOR REFERENCE DRAWING SEE DWG. 8599-060-005 SHEET 1.

THIS DRAWING WAS REPRODUCED FROM THE UNION CARBIDE CORP., LINDE DIVISION DRAWING NO. D-2231938. PROJECT NO 2573

QUAN.	PART OR DWG. #	DESCRIPTION	ITEM

REV.	DESCRIPTION	NAME	DATE	USED ON PROJECT

EQUIP. #

THIS DRAWING IS THE PROPERTY OF AGC FLAT GLASS NORTH AMERICA AND MUST NOT BE REPRODUCED OR COPIED WITHOUT WRITTEN PERMISSION FROM AGC.

UNSPECIFIED TOLERANCES ([ ] DENOTES MM)

INCHES	+/-	[MM]	+/-
0.00	0.03	[0.0]	[0.8]
0.000	0.005	[0.00]	[0.13]
0.0000	0.0005	[0.000]	[0.013]

DRAWN BY xx xx-xx-xx DWG. REF.

CHECKED SUPERSEDES

APPROVED SUPERSEDED BY

AGC FLAT GLASS NORTH AMERICA

SPRING HILL PLANT
20400 N. WEBSTER
SPRING HILL, KANSAS

DWG. TITLE: COLD BOX AREA EQUIPMENT FOUNDATION
NITROGEN PLANT
SPRING HILL, KANSAS

SHEET 4 OF X

DWG. SCALE: 3/8"=1'-0" | DWG. NO. 8599-060-005 SHEET 004 | REV 00

FOR REFERENCE ONLY

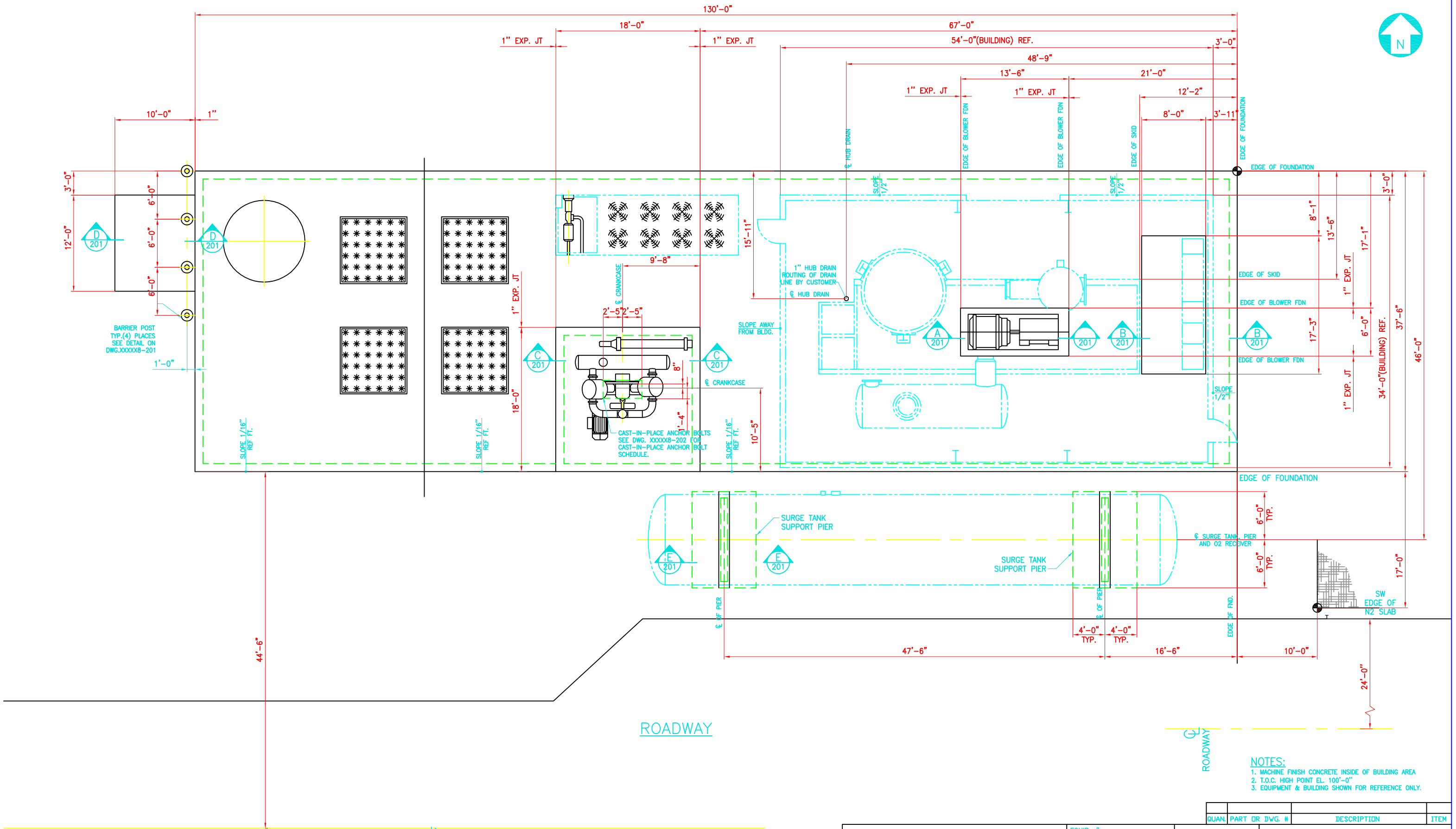

NOTES:
1. MACHINE FINISH CONCRETE INSIDE OF BUILDING AREA
2. T.O.C. HIGH POINT EL. 100'-0"
3. EQUIPMENT & BUILDING SHOWN FOR REFERENCE ONLY.

QUAN.	PART OR DWG. #	DESCRIPTION	ITEM

REV.	DESCRIPTION	NAME	DATE	USED ON PROJECT

FOR REFERENCE ONLY

EQUIP. #

THIS DRAWING IS THE PROPERTY OF AGC FLAT GLASS NORTH AMERICA AND MUST NOT BE REPRODUCED OR COPIED WITHOUT WRITTEN PERMISSION FROM AGC.

UNSPECIFIED TOLERANCES ([ ] DENOTES MM)

INCHES	+/-	[MM]	+/-
0.00	0.03	[0.8]	[0.8]
0.000	0.005	[0.00]	[0.13]
0.0000	0.0005	[0.000]	[0.0133]

DRAWN BY	xx	xx-xx-xx	DWG. REF.
CHECKED			SUPERSEDES
APPROVED			SUPERSEDED BY

AGC
FLAT GLASS NORTH AMERICA

SPRING HILL PLANT
20400 N. WEBSTER
SPRING HILL, KANSAS

DWG. TITLE: FOUNDATION LOCATION PLANT

SHEET 1 OF 1

DWG. SCALE	DWG. NO.		REV
3/16"=1'	XXXXXX-200	SHEET 001	00

Draft 11/07/08

SECTION 17.342

PROHIBITED USES

A. Structure Incident to Family Dwelling. No temporary or incomplete building, nor any automotive equipment, trailer, recreational vehicle, converted bus, garage or appurtenances incident to a family dwelling, shall be erected, maintained or used for residential purposes.

Recreational Vehicles (as defined in Section 17.302.B.110): It is permissible to park or store not more than two (2) recreational vehicles on a single-family or duplex lot, provided that the following criteria are met:

1. The recreational vehicle shall be parked in a garage, ~~the side yard~~ or rear yard but not in the front *or side* yard, except as provided in Section 17.342.A.6 *and 17.342.A.7*:
2. The recreational vehicle shall not be parked closer than two (2) feet to any property line.
3. The recreational vehicle shall not be used for on-site dwelling purposes for more than fourteen (14) days per year; permanently connected to sewer lines, water lines or electrical lines; or used for storage.
4. The recreational vehicle and the area it is parked on shall be maintained in a clean, neat and operable manner, and the equipment shall be in usable and working condition at all times. *When parked or stored in the rear yard* the area the recreational vehicle is parked on shall be *a continuous rut free surface of* ~~surfaced with~~ asphalt, concrete, or gravel.
5. The recreational vehicle shall be owned by the resident upon whose property it is parked, provided that others visiting the resident may park their recreational vehicle on the lot for a period of time not to exceed fourteen (14) consecutive days.
6. Parking of one (1) recreational vehicle is permitted outside on the front drive provided that the following items are met:
   a. No part of the recreational vehicle shall extend over sidewalks, or street right-of-way.
   b. Appeals and variances to these provisions shall be considered by the board of zoning appeals.
   c. *The area the recreational vehicle is parked on shall be rut free and continuous for the length of the vehicle, and shall be surfaced with asphalt or concrete. The use of gravel in the front yard is prohibited.*
7. *Parking of one (1) recreational vehicle is permitted outside on the side yard provided that the following items are met*:
   a. The area the recreational vehicle is parked on shall be continuous for the length of the vehicle, rut free, and shall be surfaced with asphalt or concrete. The use of gravel in the side yard is prohibited

except when the vehicle is screened from view from the street by a minimum six-foot high privacy fence.

b. The recreational vehicle shall not be parked closer than two (2) feet to any property line.

(Ord. 2006-33)